ASSEMBLY INSTRUCTION

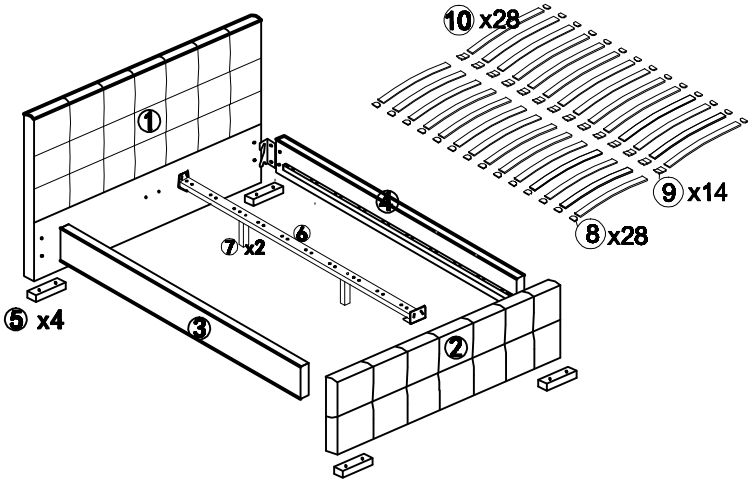

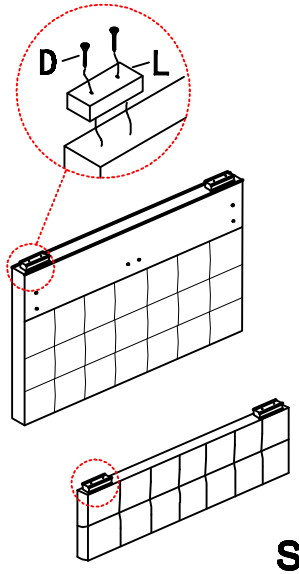

Step 1

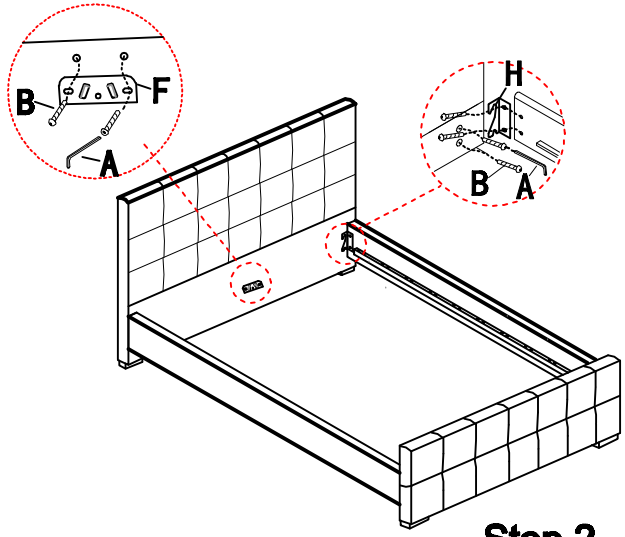

Step 2

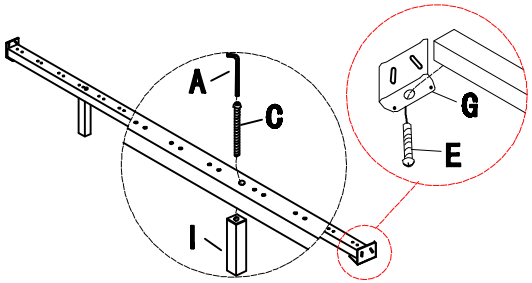

Step 3

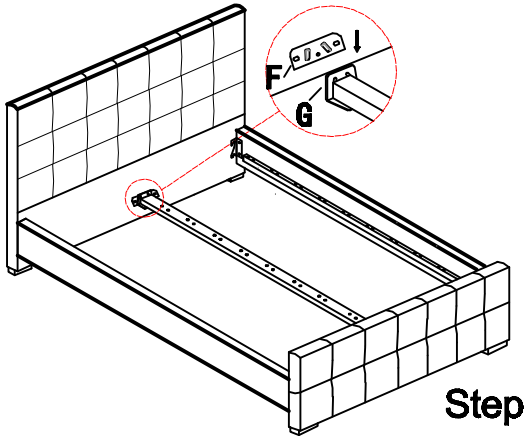

Step 4

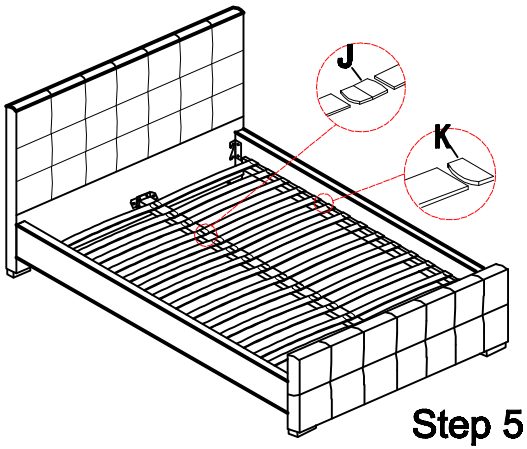

Step 5

Ax1 Bx20 Cx2 Dx8 Ex2 Fx2 Gx2 Hx4 Ix2 Jx14 Kx28 Lx4