CL-1005

Hardware Identification

Ⓐ x 01	Ⓑ x 04
Ⓒ x 04	Ⓓ x 04

Part Identification

① x 1 PC	② x 1 PC
③ x 1 PC	④ x 1 PC

1

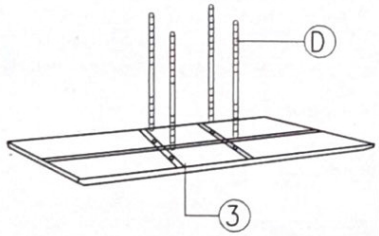

2

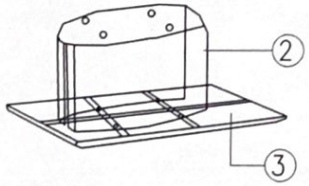

3

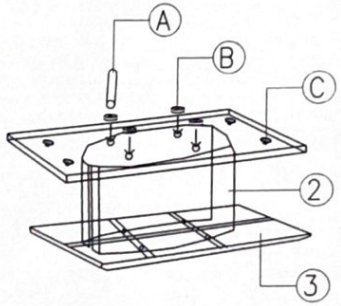
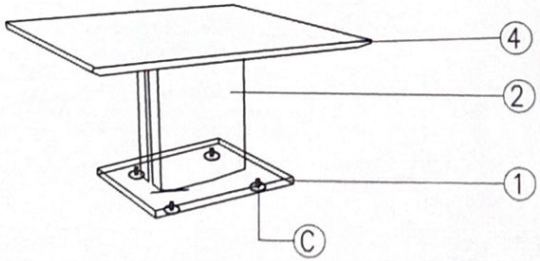
4